POLITECNICO
MILANO 1863

WatAJet

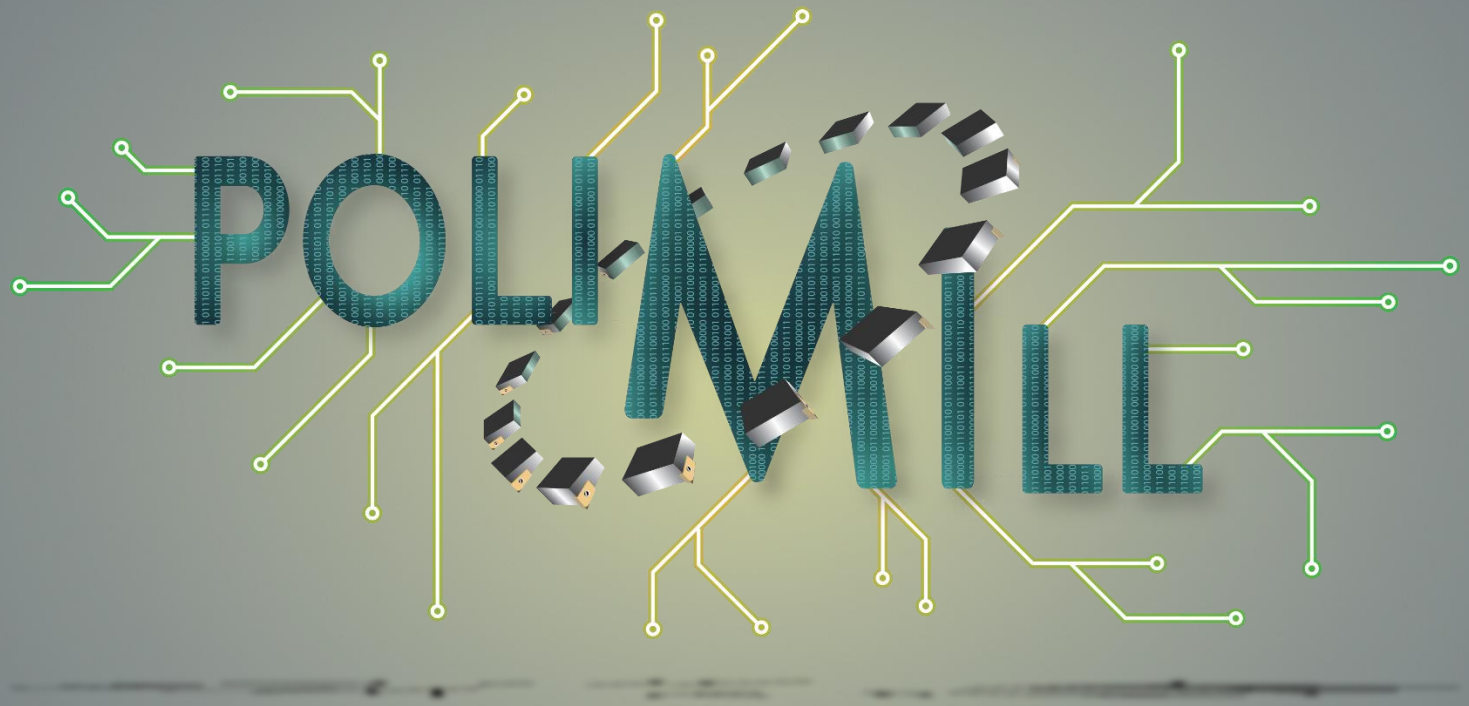

PROTOTYPE STAMPING TOOL

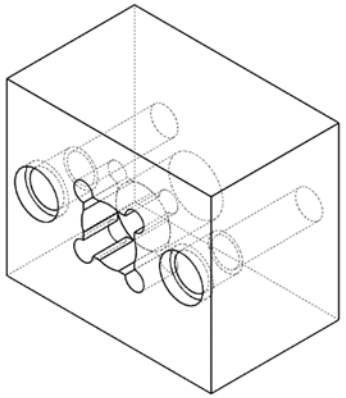

Aim of the project:

- *Machining of a blanking tool for prototypes using only milling technology*

Why?

- *Because milling it's faster than other techologies like EDM*
- *5 axis milling can create complex geometry*
- *Avoid set up between different machines*

Main goals

- *Blanking tool requires high accuracy due to the low tollerances of mechanical couplings*
- *Blanking tool prototypes need to be modifiable during prototype tests*
- *Blanking tool prototypes need to be precise because they need to give the client a workpiece with the same tollerances as the final one*

MODIFIABLE

What does it means?

During the initial stages a prototype is subject to many changes that requires a lot of corrections on the blanking-stamping tool

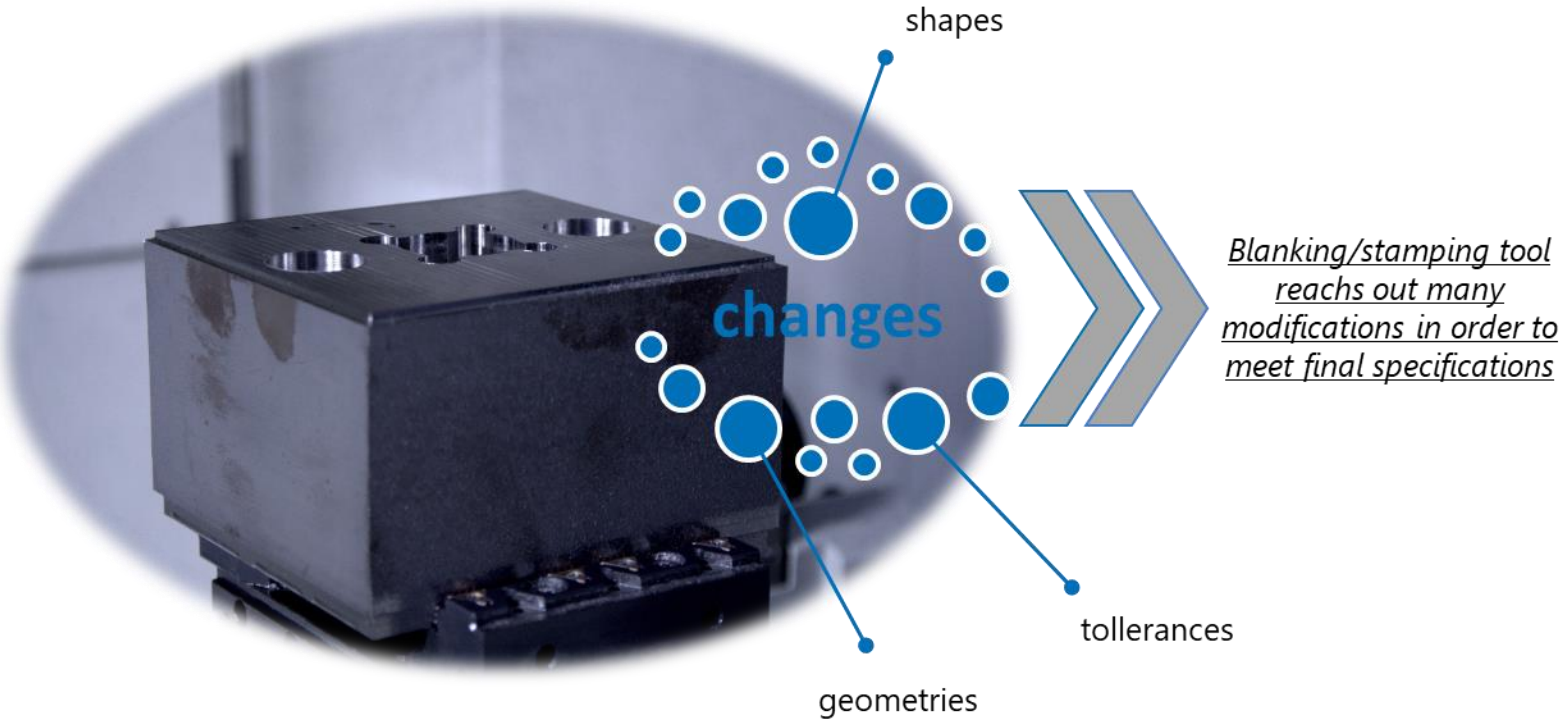

Blanking/stamping tool reachs out many modifications in order to meet final specifications

DIGITAL TWIN

How to easly manage all this together?

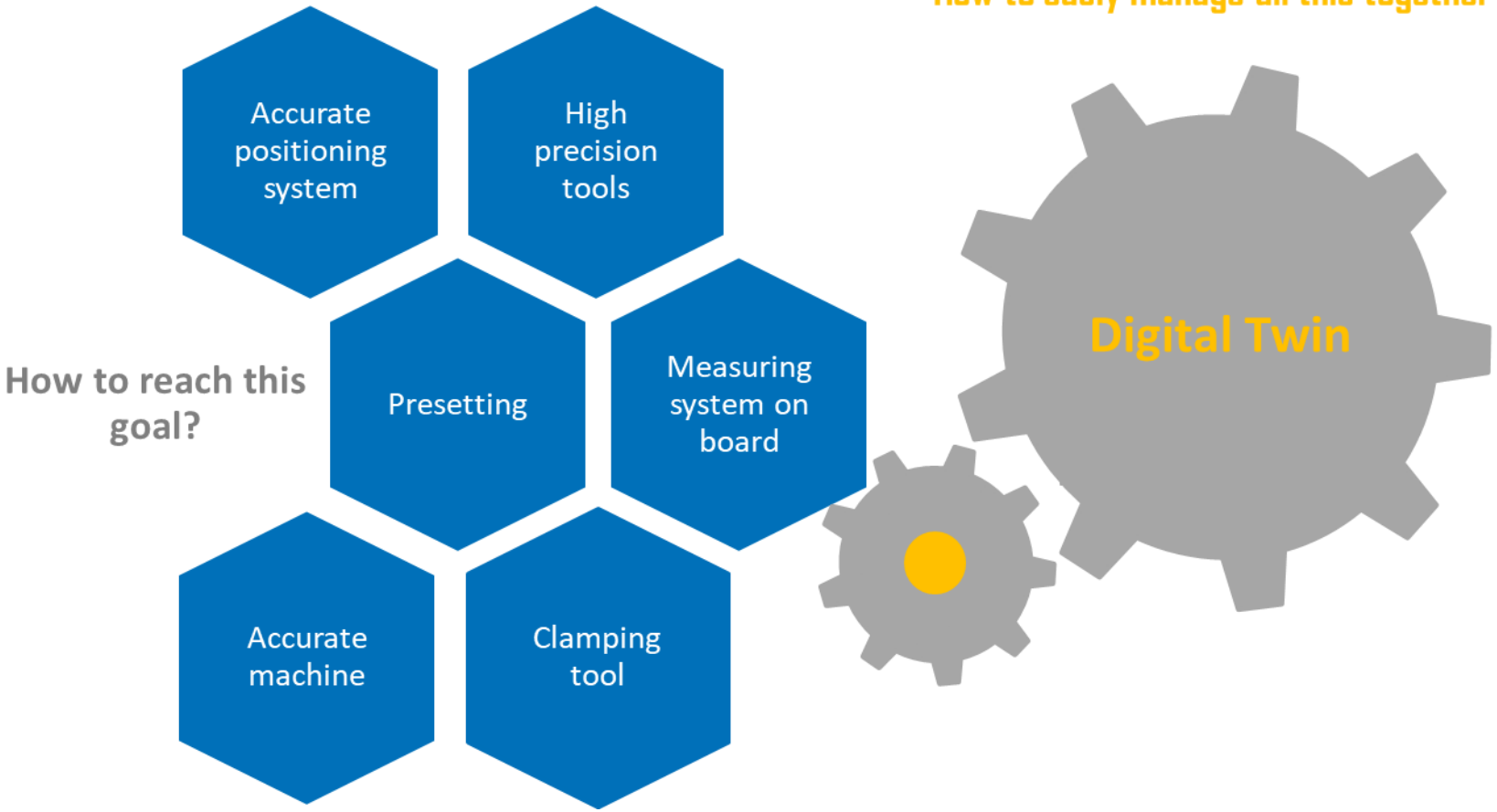

TOLLERANCES

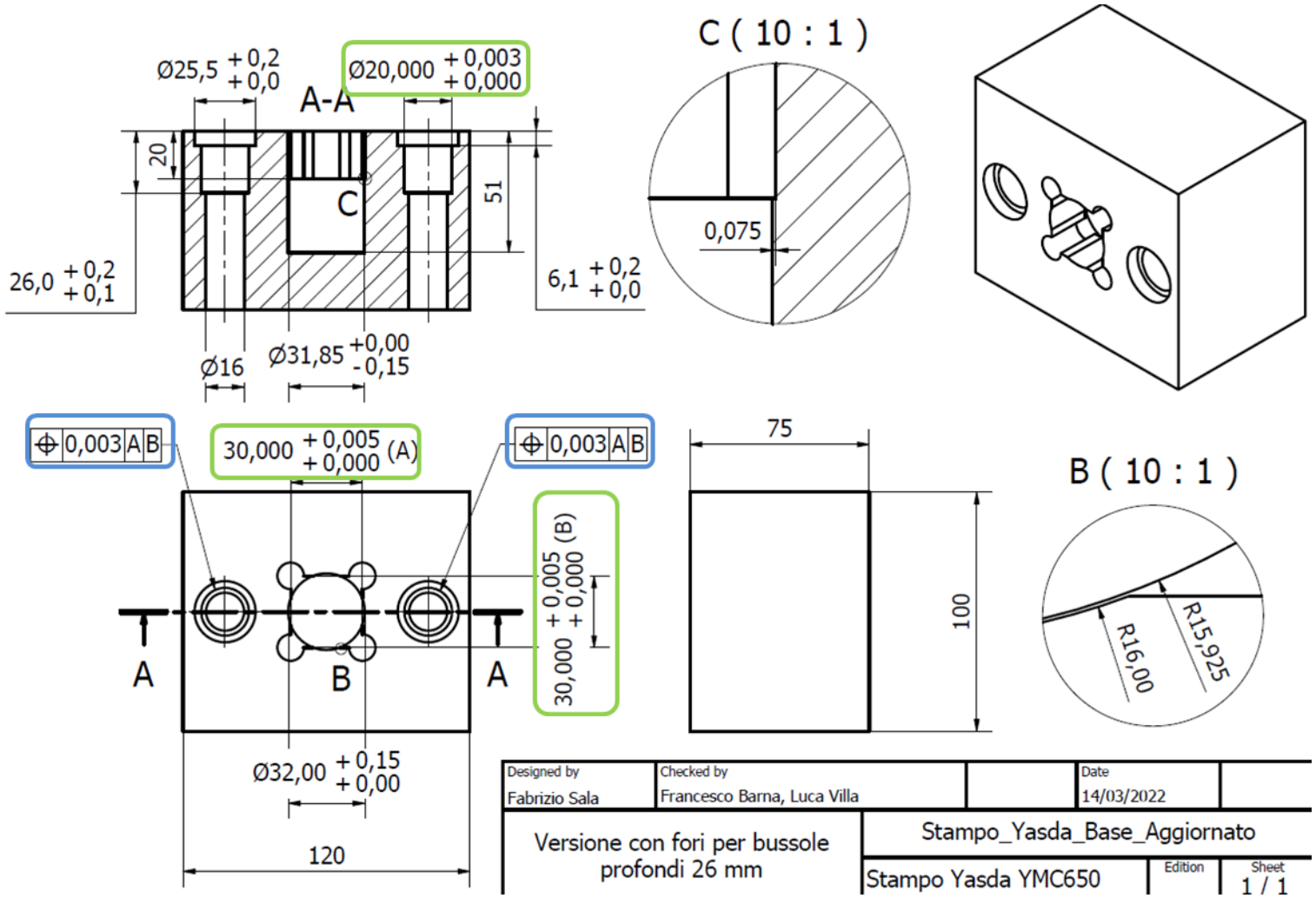

WatAJet srl

Via Tomasetto, 31 – Besnate (VA)

Commercial division eng. Stefano Volpi stefano.volpi@watajet.com

R&D division eng. Francesco Arleo, PhD
francesco.arleo@watajet.com

Production division eng. Luca Villa luca.villa@watajet.com

Scientific Coordinator prof. Massimiliano Annoni
massimiliano.annoni@watajet.com

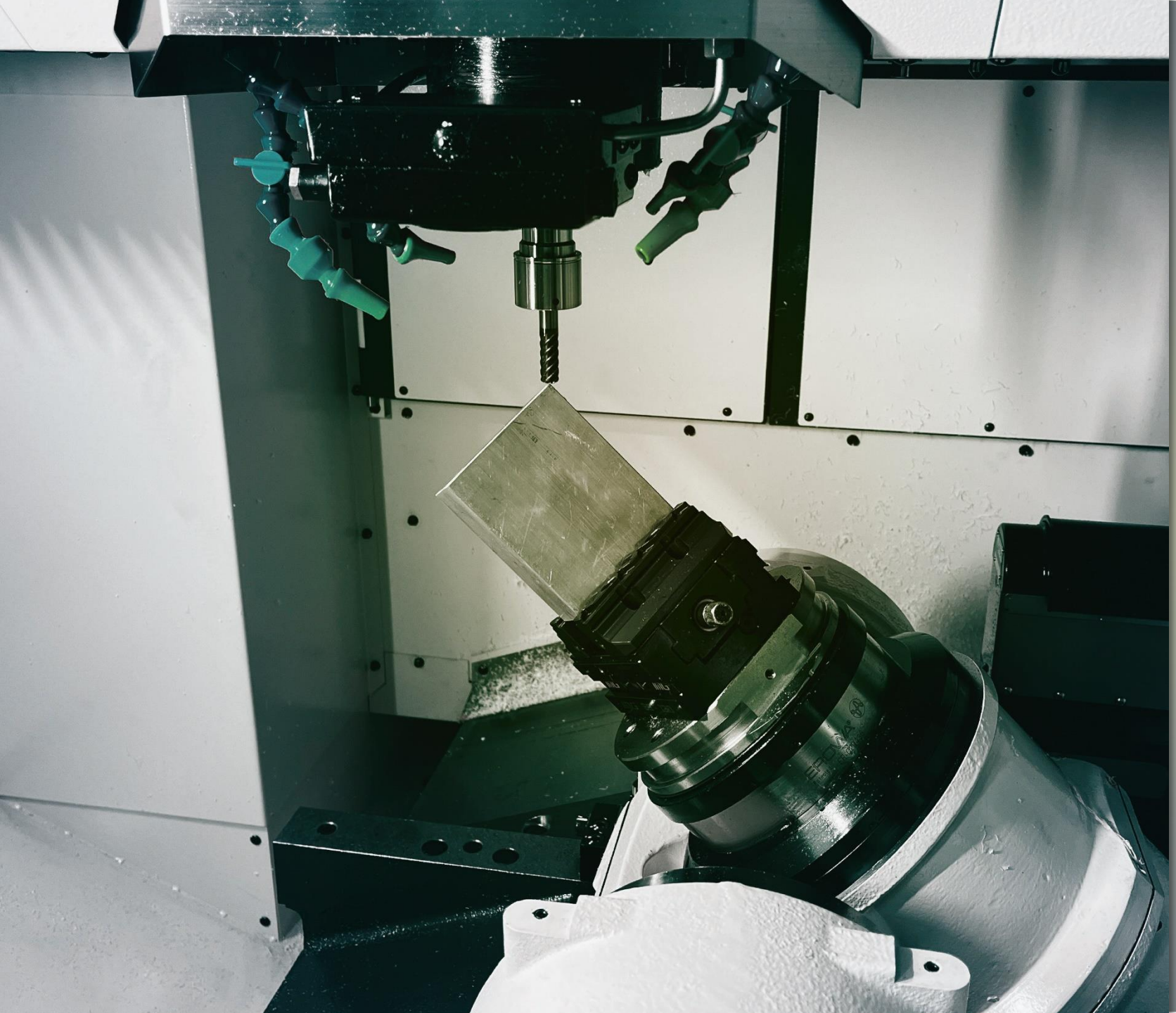

CONTACT

Massimiliano Annoni
massimiliano.annoni@polimi.it

Francesco Barna
francesco.barna@polimi.it
+39 3891106111

POLITECNICO
MILANO 1863